THIS COPY IS PROVIDED ON A RESTRICTED BASIS AND IS NOT TO BE USED IN ANY WAY DETRIMENTAL TO THE INTERESTS OF PANDUIT CORP.

PANDUIT P/N	WEIGHT
CJT	.0066 LB/50 PCS (3.02g/50 PCS)

NOTES:
1. SEE CURRENT CATALOG FOR ADDITIONAL PART NUMBER SUFFIXES TO INDICATE COLOR AND OR PACKAGE QUANTITY.
2. DIMENSIONS IN PARENTHESES ARE IN METRIC.

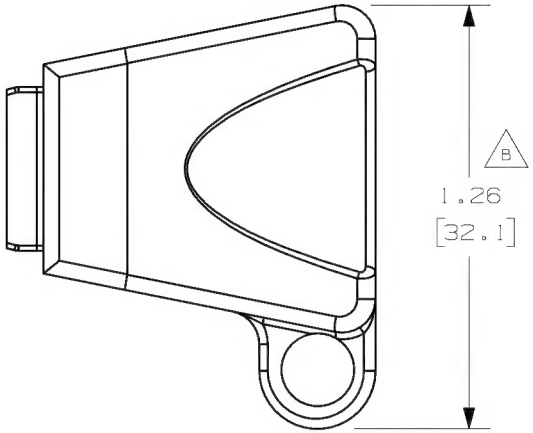

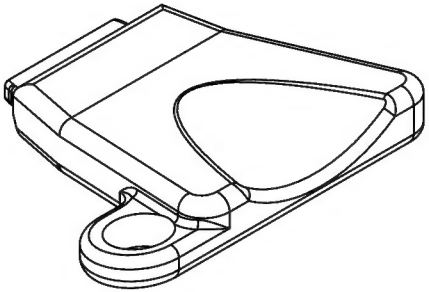

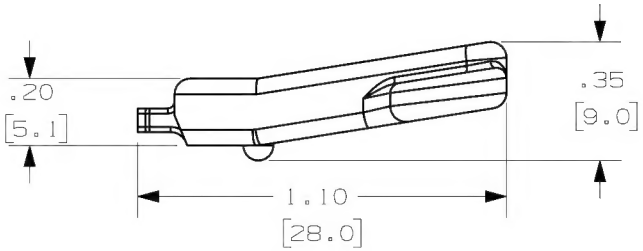

REV	DATE	BY	CHK	DESCRIPTION	ECN	CHK	CUST	SUP
2	6-27-00	LZ		UPDATED TO REFLECT PART AS MOLDED B. DIM WAS .97 [24.7] CAD MODEL	35071-33			
1	11-11-99	JsP	CEF	A. REVISED TITLE.	35071-33	CEF		
R	1-30-96	JBA	CEF	RELEASED TO PRODUCTION.	35071-33	CEF		

CAD FILENAME/LAYERS: D35071CD_CJT_00C

PANDUIT CORP. TINLEY PARK, ILLINOIS

CAT. 3 AND CAT. 5E JACK TERMINATION TOOL
A CUSTOMER DRAWING (CJT)

UNLESS OTHERWISE SPECIFIED, DIMENSIONAL TOLERANCES ARE:
(.X) ± (.XXX) ±
(.XX) ±.03(.8) ANGLES ±

UNLESS OTHERWISE SPECIFIED, ALL DIMENSIONS ARE GIVEN IN INCHES, THIRD ANGLE PROJECTION.

DRAWN BY: JBA
MAT'L: NYLON
SCALE: NONE
DATE: 1-30-96
DRAWING NO.: 35071-33
DWG SIZE: A
CHECKED BY: CEF